▼ OSC Distributed Synchronous System

Technical Features:

- 16/32-point control cabinet connected to sub-pump stations via power lines and communication lines, eliminating the need for long-distance hydraulic pipelines.
- Sub-pump stations can be used as independent pump stations, equipped with wire-controlled handles.
- Pump stations come standard with displacement sensors, pressure sensors, and storage boxes.
- 16-22 inch large-size touch screen.
- Synchronous lifting / synchronous lowering / pressure sensor weighing analysis control program.
- Standard 50-meter power lines and communication lines, optional up to 100-meter cables.
- Multiple systems can be combined to achieve synchronous control systems with up to 128 points.

▼System Main Interface:

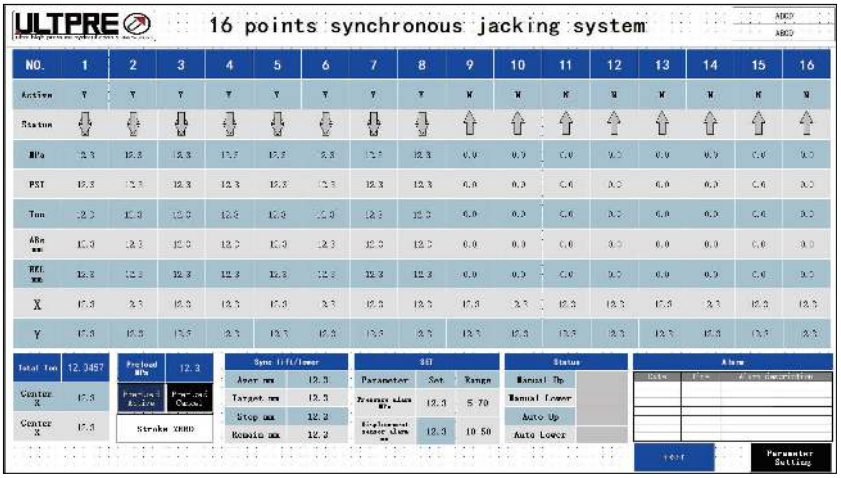

1.Any point can be selected for control.
2.Real-time display of pressure value, tonnage value, absolute and relative values of displacement sensors for each point
3.Manually input X and Y coordinate values for each control point.
4,Manual control: manual lifting / manual lowering.
5,Pre-lifting: set low pressure, after startup, the cylinder automatically stops when reaching the set pressure value, effectively contacting the load without moving it.
6.Automatic control: after setting the target position, automatically perform synchronous lifting / synchronous lowering work.
7.Weighing analysis: total tonnage calculation, automatic center of gravity analysis.
8.Other functions: pressure and displacement signal loss alarm, overpressure alarm, stroke over-tolerance alarm, etc.

▼ Purchase Model Specification Table:

Item	Voltage	Phase	Motor(KW)	Flow rate (L/Min)	Oil available (L)	Points	Displacement Sensor	Cable Length (M)	Weight (KG)
OSC-16	380V	3	14	/	/	16	/	/	175
OSC-32	380V	3	28	/	/	32	/	/	200
OSC-3030EVB43R	380V	3	0.75	0.5	30	1	1000MM	/	93
OSC-PC-50	380V	3	/	/	/	1	/	50M	7
OSC-SC-50	/	/	/	/	/	1	/	50M	3
OSC-PC-100	380V	3	/	/	/	1	/	100M	14
OSC-SC-100	/	/	/	/	/	1	/	100M	6

▼ OSC16/32:

16/32 sets of power plugs, 16/32 sets of communication line plugs

Cable Storage Box

▼OSC-3030EVB43R

▼OSC-PC-50/100

▼OSC-SC-50/100

▼OSC-16 Product Illustration

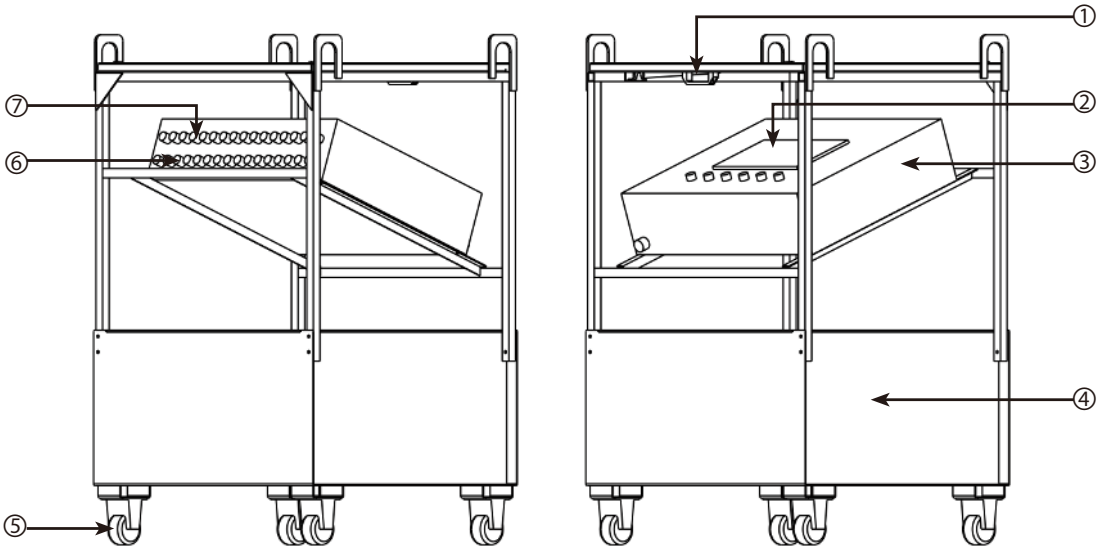

NO	Name
1	Openable Protective Cover
2	16-inch Touch Screen
3	Electric Control Box
4	Cable Storage Box
5	Lockable Casters
6	16 Sets of Communication Line Plugs
7	16 Sets of Power Line Plugs

▼OSC Outline Dimensional Drawing:

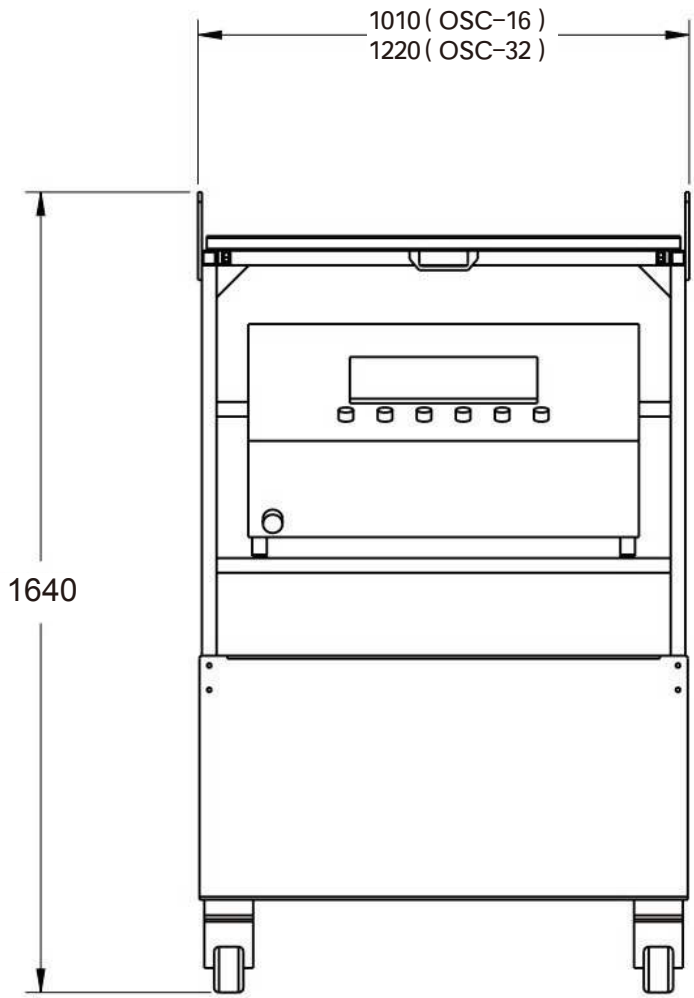

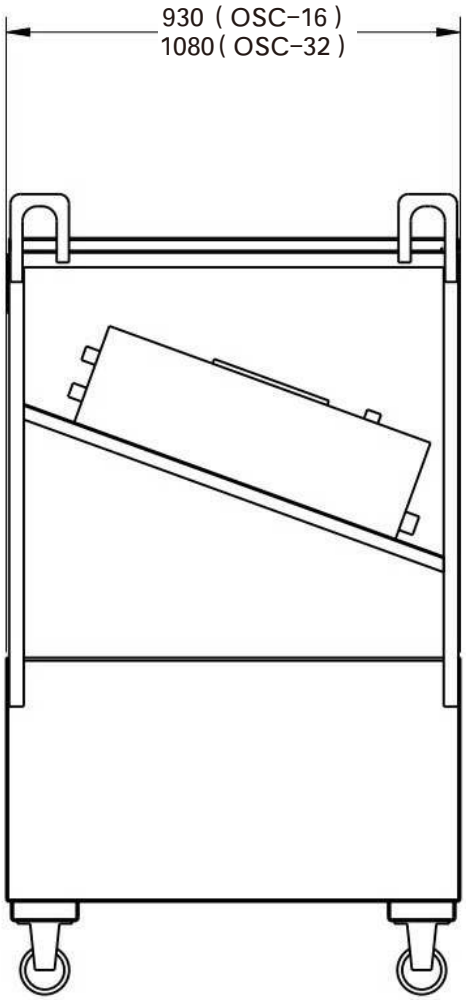

▼ OSC-3030EVB43R Hydraulic Pumps

OSC-3030EVB43 hydraulic pumps

Maximum pressure: 70MPa

Motor size: 750W

High pressure flow: 0.5L/Min

Low pressure flow: 3.5L/Min

- IEC brushless motor, maintenance-free
- Gear pump and radial piston pump two-stage pump structure, high efficiency work
- Integral design of motor and pump head, light weight
- 75dB ultra-low noise
- Built-in safety valve, external adjustable relief valve
- Standard pressure gauge, oil outlet thread quick connector
- Standard visual oil level gauge, oil filler port air filter, oil drain port plug
- Standard 6-meter power line, 1000MM range displacement sensor with 10-meter cable, detachable 6-meter wire-controlled handle, 3-phase 4-core aviation plug

▼ OSC-3030EVB43R Product Specification Sheet

Model	Voltage	Motor Power	Reservoirs capacity	Power Phase	Low Pressure Flow	High Pressure Flow	Weight
OSC-3030EVB43R	380VAC	750W	30L	3PH	3.5L/Min	0.5L/Min	93KG

▼ Packaging list

Name	Specification	Quantity
Power Cable	6M Cable	1
Displacement Sensor	1000MM Range	1
Displacement Sensor Cable	10M Cable	1
Wire-Controlled Handle	3-button Control, 6M Cable	1
Aviation Plug	3-phase 4-core	1
Matching Socket	-	1

▼ OSC-3030EVB43R Product Illustration

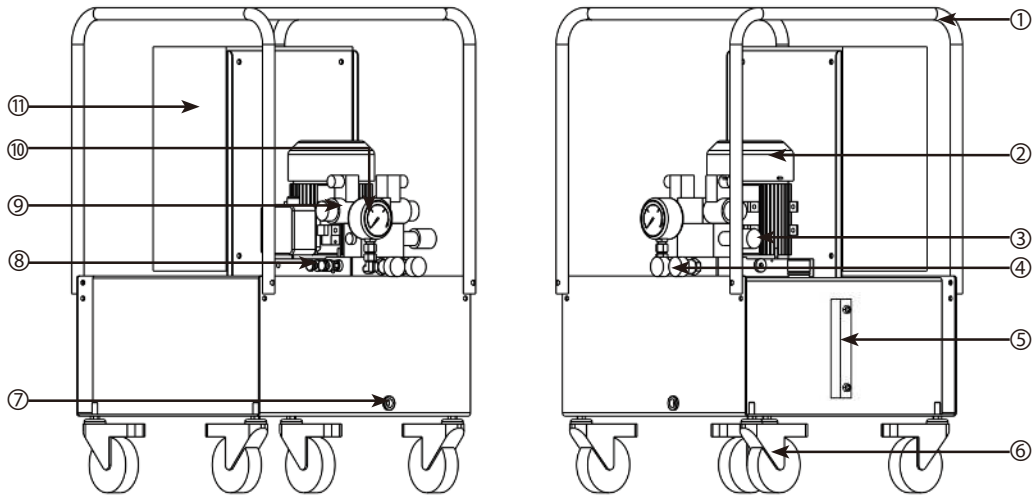

NO	Name
1	Protected Framework
2	Motor
3	Pressure Transducer
4	Couplers
5	Sight Glass
6	Lockable Casters
7	Oil Drain Port
8	Relief Valve
9	Solenoid Directional Valve
10	Pressure Gauge
11	Electric Box

▼ OSC-3030EVB43R Outline Dimensional Drawing

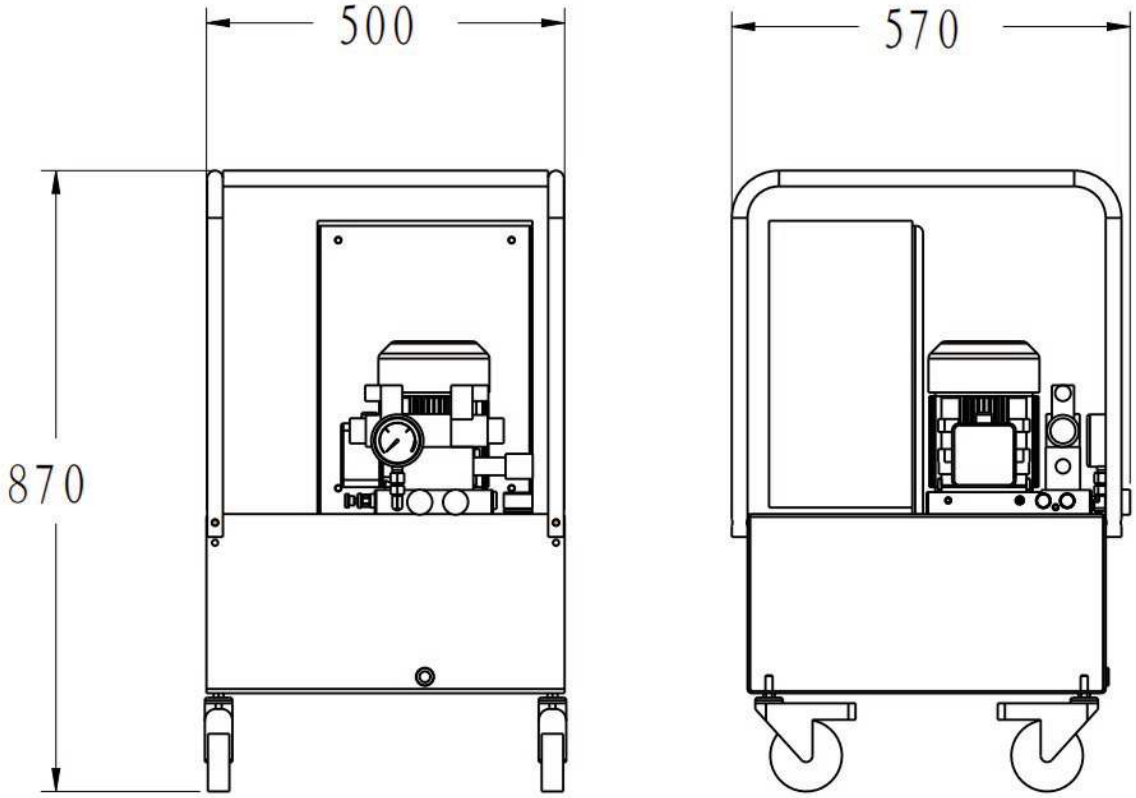

▼ OSC-3030EVB43R Hydraulic Schematic Diagram

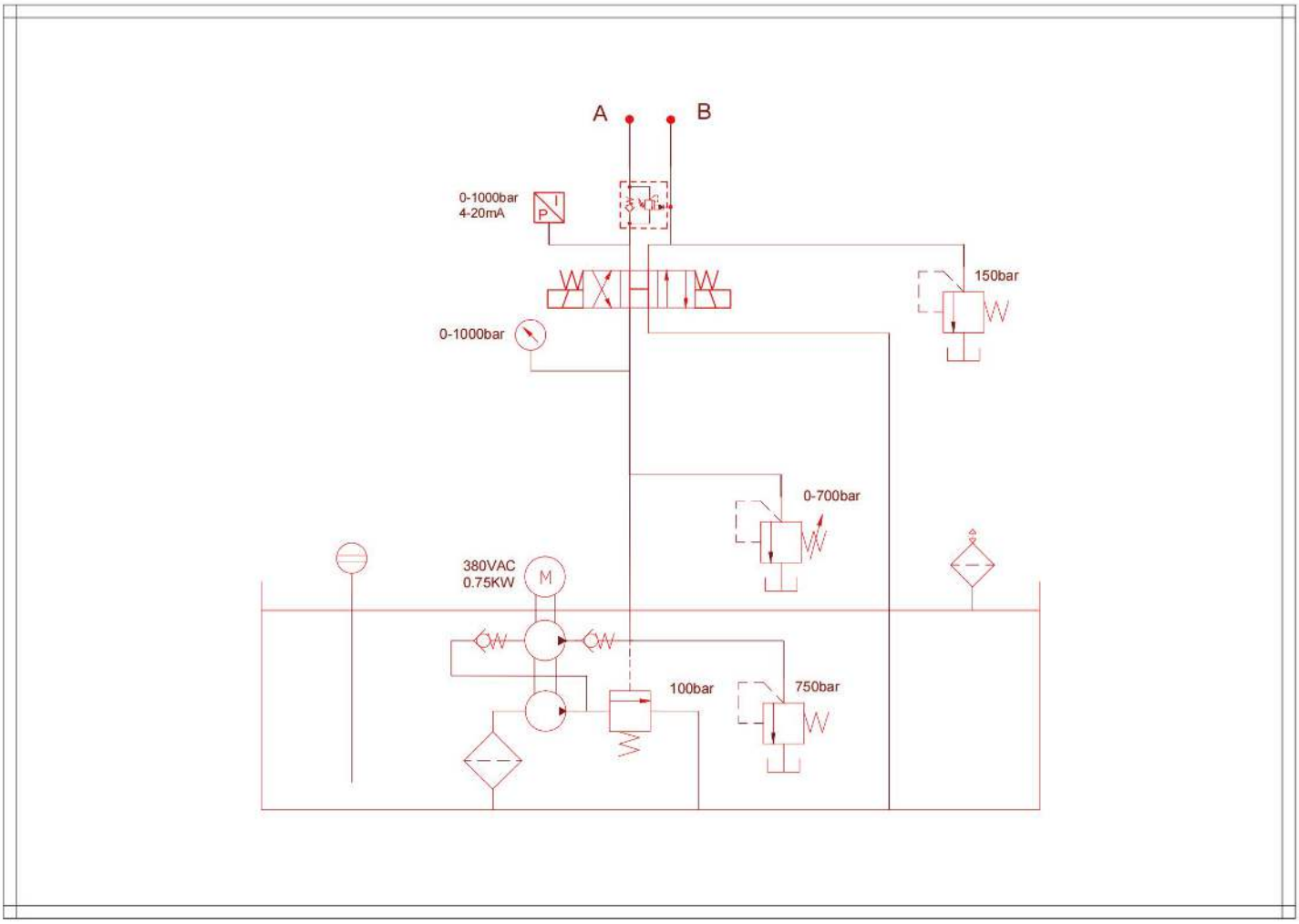

▼ OSC-3030EVB43R Flow-Pressure Curve

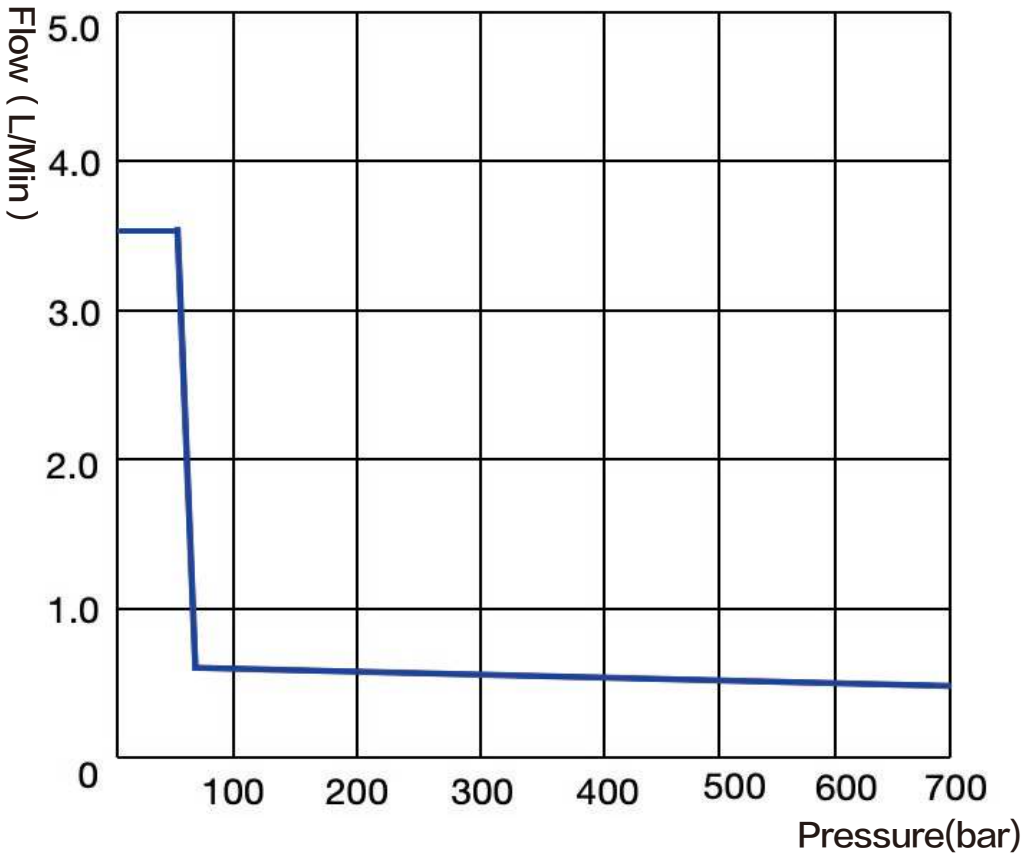

▼ Distributed Synchronous Top Ordering List

Model	Configuration	Order Quantity
OSC-16	Control program accurately controls equipment and improves operation efficiency; 16-point control cabinet is suitable for multiple positions and integrated to save space; cable storage box organizes cables for easy access.	
OSC-32	Control program accurately controls equipment and improves operation efficiency; 32-point control cabinet is suitable for multiple positions and integrated to save space; cable storage box organizes cables for easy access.	
OSC-3030EVB43R	Standard configuration includes 1000MM range displacement sensor and 10-meter cable to meet long-distance installation needs; detachable 6-meter wired remote control handle is flexible to operate.	
OSC-PC-50	It has 4-core aviation connector, 50M length; bayonet connection and three-point locking structure design ensure stable connection; engineering plastic shell is effectively corrosion-resistant.	
OSC-SC-50	It has 50M length; oxygen-free thickened copper core ensures stable transmission; multi-layer protective sleeve is waterproof, sun-proof, anti-freezing and anti-tensile.	
OSC-PC-100	It has 4-core aviation connector, 100M length; bayonet connection and three-point locking structure design ensure stable connection; engineering plastic shell is effectively corrosion-resistant.	
OSC-SC-100	It has 100M length; oxygen-free thickened copper core ensures stable transmission; multi-layer protective sleeve is waterproof, sun-proof, anti-freezing and anti-tensile.	